95cm COLLAPSIBLE MANPACK SHELTER

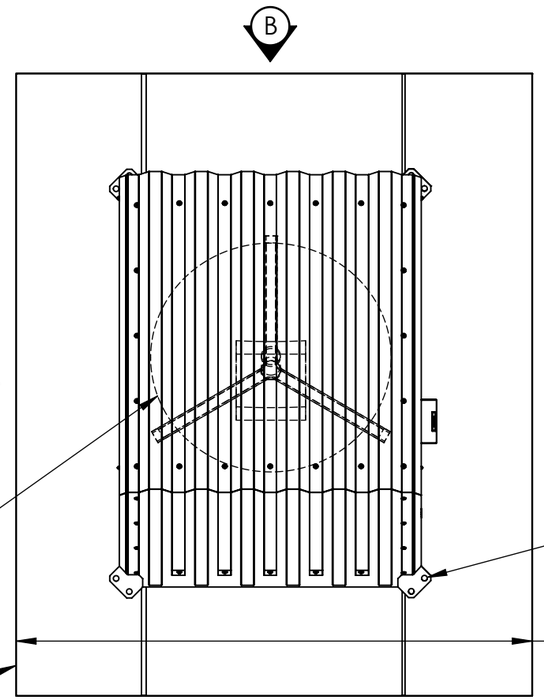

PLAN VIEW

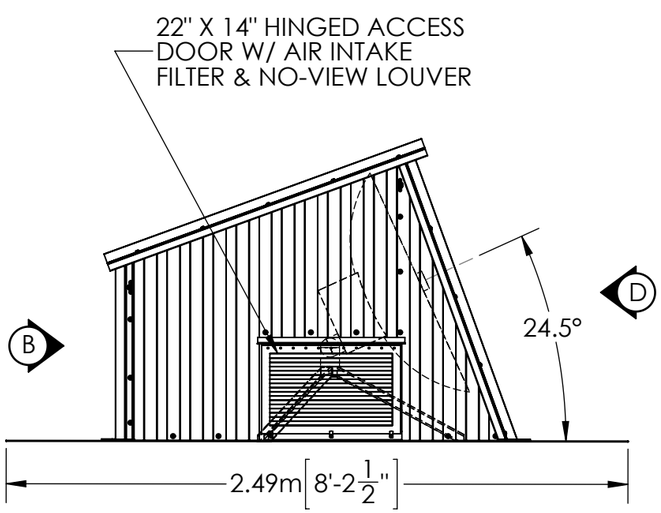

SIDE "A" ELEVATION

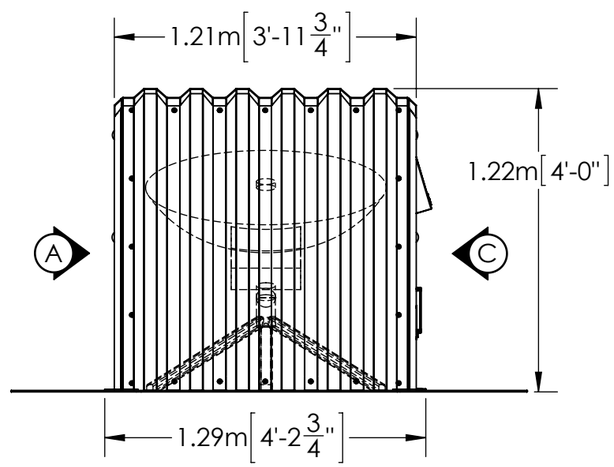

SIDE "D" ELEVATION

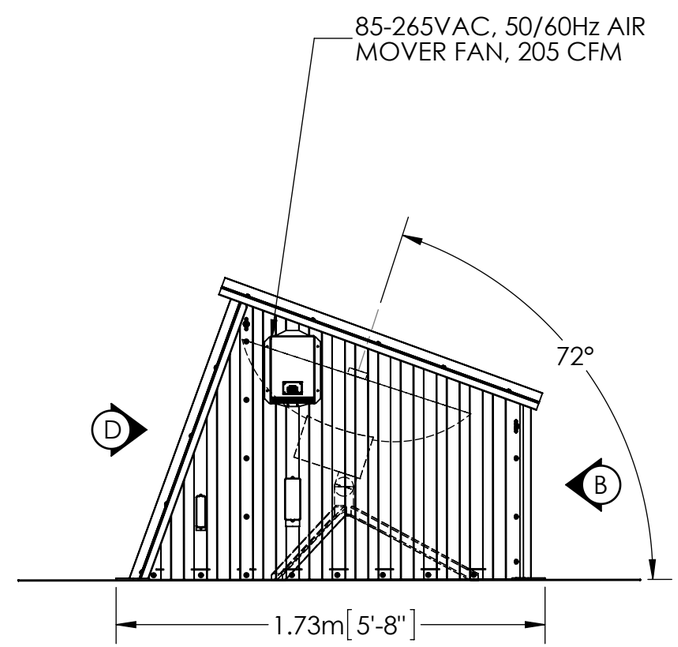

SIDE "C" ELEVATION

COMPANY CONFIDENTIAL & PROPRIETARY

ConcealFab Corporation
3265 FILLMORE RIDGE HEIGHTS
COLORADO SPRINGS, CO 80907
PHONE :719-599-3400
FAX: 719-599-0057

PROPRIETARY INFORMATION
USE, REPRODUCTION, OR DISCLOSURE IS SUBJECT TO RESTRICTIONS SET FORTH IN NON-DISCLOSURE AGREEMENT AND OTHER CONTRACT DOCUMENTS PERTAINING TO THIS PROJECT

Project Information:

PROJECT
1.61m L X 1.18m W X 1.21m H SHELTER 95cm MANPACK

Rev:	Date:	Description:	By:
A	12/04/13	NEW RELEASE	SCS
B	01/02/14	UPDATED MODEL	OBC

DO NOT SCALE DWG

DIMENSIONS ARE IN INCHES

DECIMAL	ANGLE	FRACTION
X.XX ± 0.020 X.XXX ± 0.010	±1°	±1/16"

Consultant:

Consultant:

Sheet Title:

95cm COLLAPSIBLE MANPACK SHELTER PROPOSAL

Part Number:

001943