CONCEALFAB® UNIVERSAL POLE-TOP MOUNTING SYSTEM

Customized for all Major Quasi-Omni Antennas

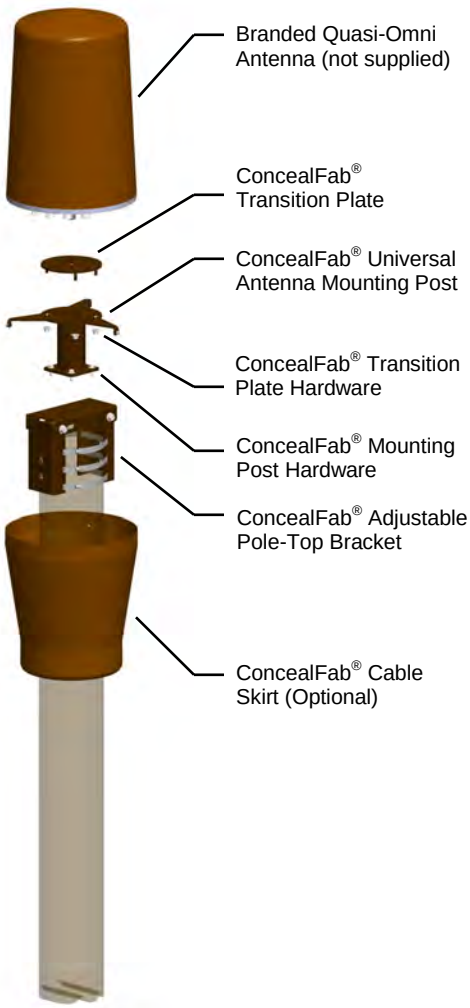

DAS and Small Cell Solutions

Universal Pole-Top Mounting System - Customized for Quasi-Omni Antennas

ConcealFab's proven wireless solutions are ideal complements to all infrastructure upgrades or retrofit projects. Our standard or custom systems integrate with any antenna and radio configurations, effortlessly blend into urban/suburban environments, and withstand harsh weather conditions. This vendor agnostic, *DAS and Small Cell Solutions* platform accommodates multiple shapes, sizes and weights, providing flexibility for future hardware needs. The product portfolio includes ultra RF-transparent, maintenance-free coverings, high-strength steel mounting brackets, and light-weight, durable carbon fiber poles.

General Specifications:

- Rated for extreme exposure zones
- Penetrating or clamping Pole-Top attachments
- Universal platform for all hardware options
- Site-specific adaptations available
- Hollow core for concealing cables or diplexers
- Color-coordinated wireway systems available
- Adjustable bracing for varying pole diameters
- Modular configurations blend into any environment

ConcealFab® Corporation

WWW.CONCEALFAB.COM PH:719.599.3400 SALES@CONCEALFAB.COM

©2013 ConcealFab Corporation. All Rights Reserved D071328
Content and specifications are typical and subject to change without notice

CONCEALFAB® UNIVERSAL POLE-TOP MOUNTING SYSTEM

Customized for all Major Quasi-Omni Antennas

Structurally Sound

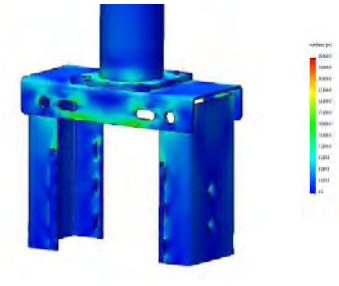

- Structurally designed and reinforced to accommodate Quasi-Omni Antennas
- FEA Rated for 150 MPH wind gusts
- PE Certified for extreme exposure zones

Aesthetically Pleasing

MULTIPLE COLOR OPTIONS

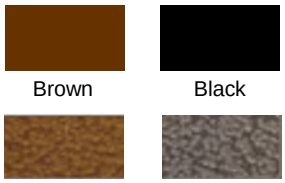

- Powder-coat finish protects against harsh weather
- Matches common infrastructure such as wooden or steel utility poles
- Optional wire-marshalling area skirt
- Optional custom color matching

Universal Platform

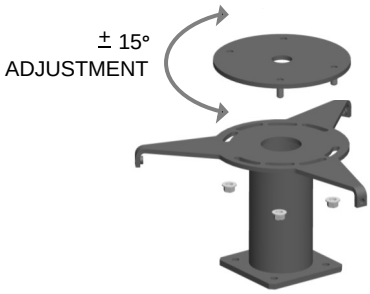

- Universal mounting plates/adaptors for: Kathrein-Scala, CSS, Andrew and Amphenol
- Mounting plate configuration accommodates post-installation azimuth adjustment
- Seamlessly integrates with all ConcealFab RF-transparent antenna pods
- Optional mast configuration to mount individual or multiple panel antennas

MECHANICAL SPECIFICATIONS AS DRAWN	
SPECIFICATION	**MEASUREMENT**
BRACKET HEIGHT	16 3/4” (425.5mm)
BRACKET WIDTH (CLAMP)	5" (127mm)
BRACKET LENGTH	11" (279.4mm)
HEIGHT WITH SKIRT	18" (457.mm)
BRACKET WEIGHT	26 pounds (11.8 kg)

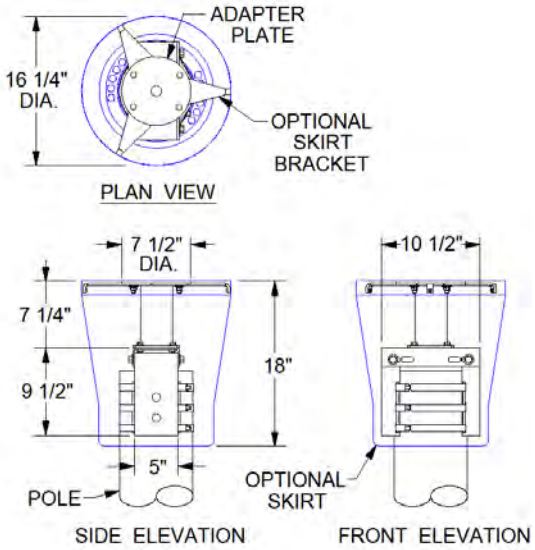

ConcealFab® Corporation

WWW.CONCEALFAB.COM PH:719.599.3400 SALES@CONCEALFAB.COM

©2013 ConcealFab Corporation. All Rights Reserved D071328
Content and specifications are typical and subject to change without notice